Ex wood-fired six angle heater 30kW

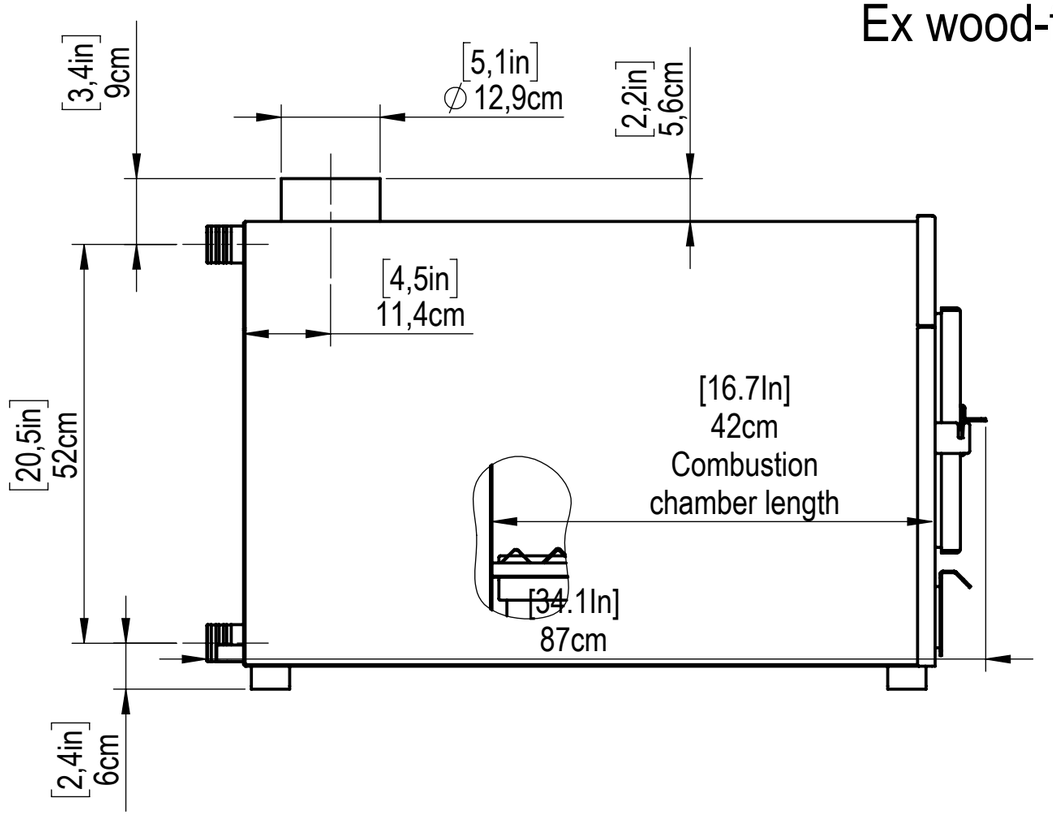

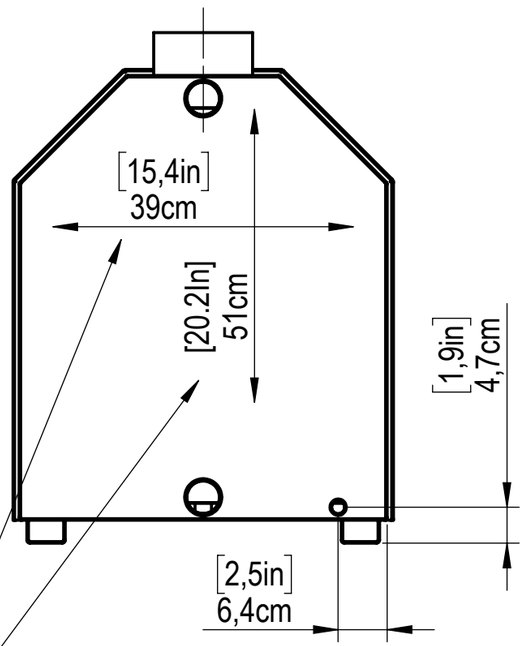

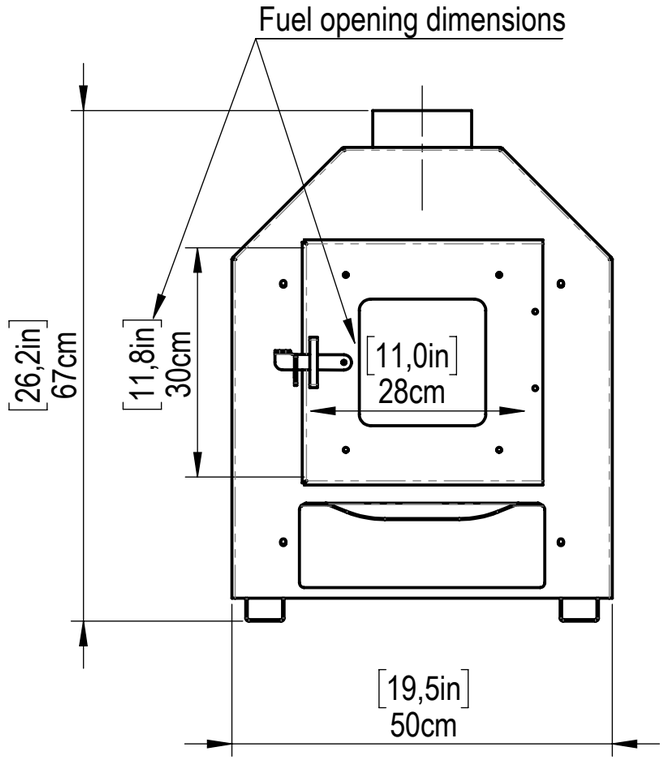

Combustion chamber
crossection dimensions

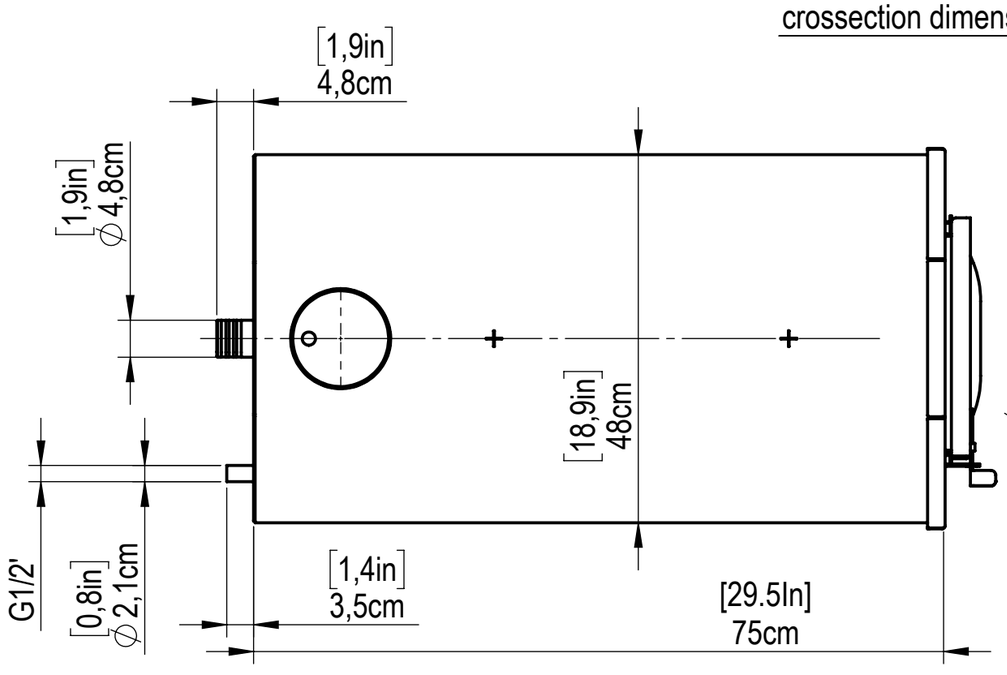

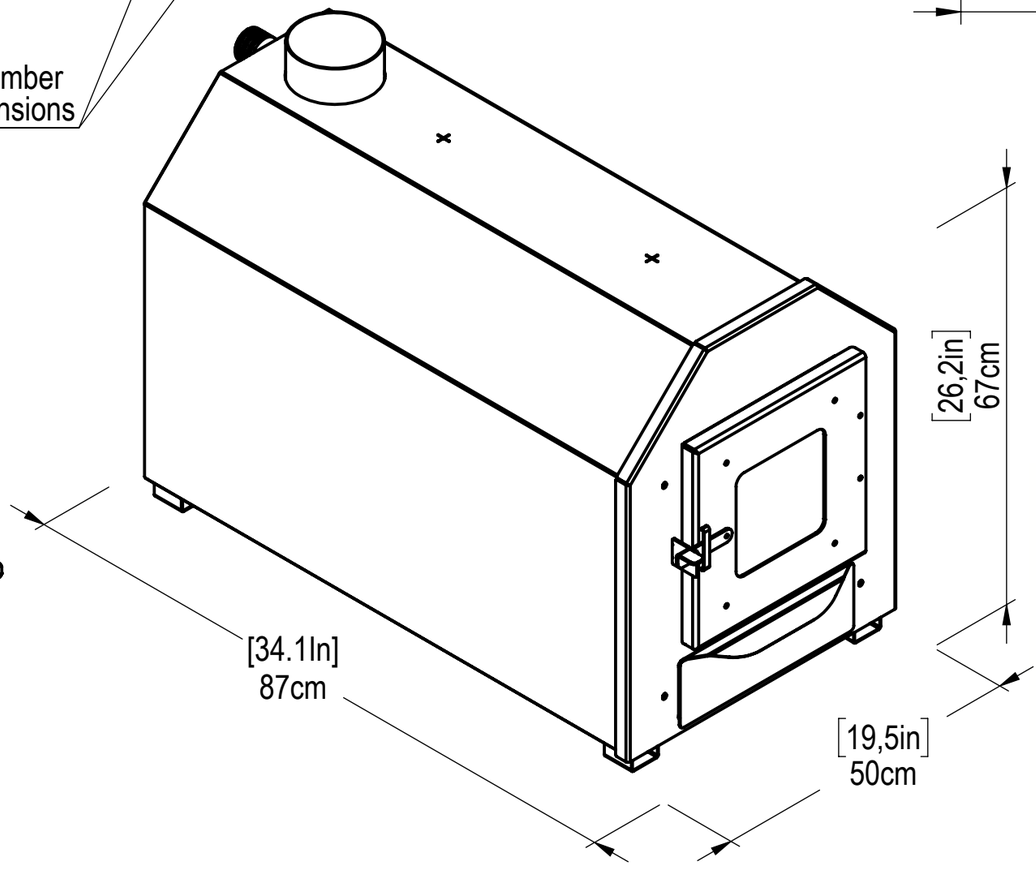

TEN SPA